POKHARA UNIVERSITY

Level: Bachelor
Programme: BE
Course: Electronic Devices

Semester: Spring

Year : 2021
Full Marks: 100
Pass Marks: 45
Time : 3 hrs.

Candidates are required to give their answers in their own words as far as practicable.

The figures in the margin indicate full marks.

Attempt all the questions.

1. a) Explain and differentiate between ideal and practical diode. Also differentiate between depletion and diffusion capacitance. 8

   b) Explain the Ebers Moll equation of BJT with necessary derivation and diagram. 7

2. a) In the circuit below V_s= 20V and R_L = 250 Ω. If V_s can vary from 30 V to 40 V also R_s = 25 Ω Find 8

   i. The maximum and minimum current in the load and Zener diode.

   ii. The maximum and minimum power dissipated in the diode.

   iii. Rated power dissipation that R_s should.

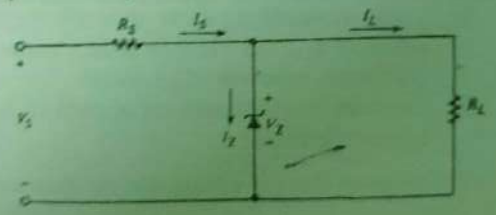

   b) Explain the working principal of NPN transistor with required diagram. Show the relationship between α and β in transistor. 7

3. a) Draw the small signal model of common emitter configuration and derive the expression of its current gain, voltage gain, input impedance and output impedance using h-parameters. 8

   b) What do you mean by transistor configuration?. Compare the characteristics of all configuration. Suggest which one is best with justification. 7

Explain Op-amp as an adder.

4. a) The Schering Bridge has the following constants, R_1=1.5KΩ, C_1=0.4μF, R_2=3KΩ and C_3=0.4μF at frequency 1kHz. Determine the unknown resistance and capacitance of the bridge and dissipation 7

   b) Show that a spring control permanent magnet moving coil instrument has a uniform scale. 8

5. a) What is a Transducer? Explain the working principle of LVDT. 8

   b) A strain gauge is bonded to a beam 0.1m long and has a cross sectional area 4 cm^2.Young modulus for steel is 207 GN/m^2.The strain gauge has unstrained resistance of 240Ω and a gauge factor of 2.2.When a load is applied,the resistance of gauge changes by 0.013Ω.Calculate the change in length of the steel beam and the amount of force applied to the beam. 7

6. a) Explain the working principle of Strip chart recorder. 8

   b) What is the importance of Signal conversion? Find output for Successive approximation ADC for a 4 bit converter to a 3.217 V input if reference voltage is 5V. 7

7. Write short notes on: **(Any two)** 2×

   a) Crossover distortion

   b) Effect of negative feedback on Bandwidth

   c) Classification of transducers.

Level: Bachelor
Programme:BE
Course: Electronic Circu

Candidates are require
as practicable.
The figures in the margi
Attempt all the question

1. a) What is cascading? Calcu
scale.

b) Find overall voltage gain (
equivalent circuit of circui

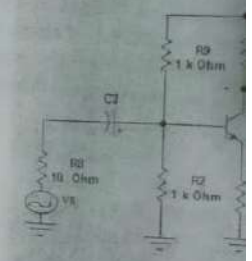

2. a) Derive an expression for m
How is crossover distorti
briefly.

b) An 90 Ω load is connecte
class A power amplifier
Determine the maximum ou

3. a) When negative feedback is a
gain fall to 50.
i) Calculate the fraction of o

POKHARA UNIVERSITY

Level: Bachelor | Semester: Fall | Year : 2021
Programme: BE | Full Marks: 100
Course: Electronic Circuit and Instrumentation | Pass Marks: 45
Time : 3hrs.

Candidates are required to give their answers in their own words as far as practicable.

The figures in the margin indicate full marks.

Attempt all the questions.

1. a) What is multistage amplifier and why cascading is used in multistage amplifier? Derive an expression for overall voltage gain of n-stage multistage amplifier. 8

   b) Using re model, find (v_L /v_S) for the cascaded BJT amplifier given below. Assume $re_1 = re_2 = 20\ \Omega$, $\beta_1 = \beta_2 = 100$. 7

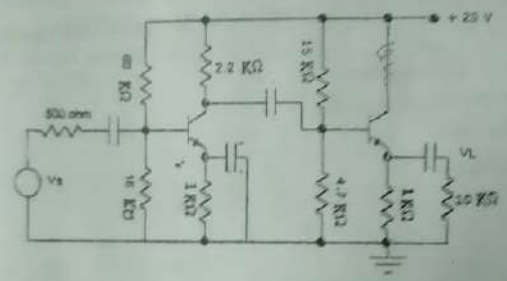

2. a) Derive an expression for maximum possible efficiency of Class B push pull amplifier. 8

   b) Explain Barkhausen criteria for Oscillation. Explain the operation of a RC Phase shift Oscilator. Derive the expression for frequency of oscillation and provide sufficient condition for oscillation. 7

3. a) What is the difference between ideal and practical operational amplifier. Design an op amp circuit to produce output, $V_0 = 5V_1 + 2.5V_2 - 7.5V_3$. 7

   b) Explain operational amplifier with the help of block diagram. How operational amplifier can be used as an integrator. Explain. 8

4. a) Design a multirange dc milliammeter using a basic movement with internal resistance Rm= 50 ohm and a full scale deflection current 7

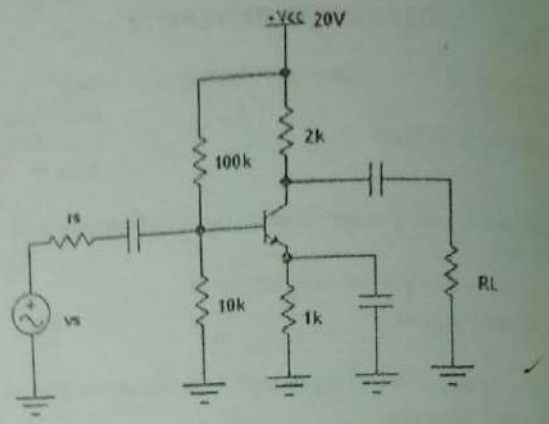

4. a) Find the Input impedance, output impedance and the Overall voltage gain for the transistor shown below.
h_{ie} = 4.7K Ohm, h_{fe} = 150, h_{re} = 2.4×10^{-4}, h_{oe} = 35 micro-siemen.

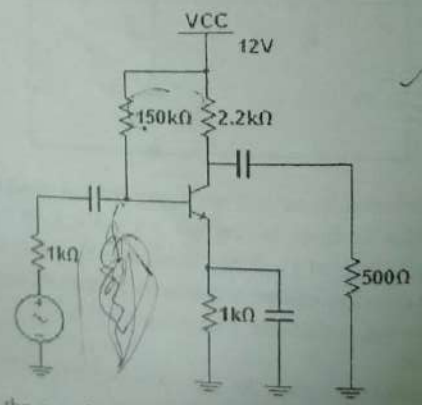

b) Determine the meaning and dimension for all the hybrid parameters. Also, derive the expression for current gain of an amplifier using hybrid equivalent model.

5. a) For the given CS NJFET circuit, calculate the input impedance output impedance and its voltage gain. Given $r_d = 20k$, $g_m = 5mS$, $I_D = 1mA$, $V_{DS} = 4V$. 8

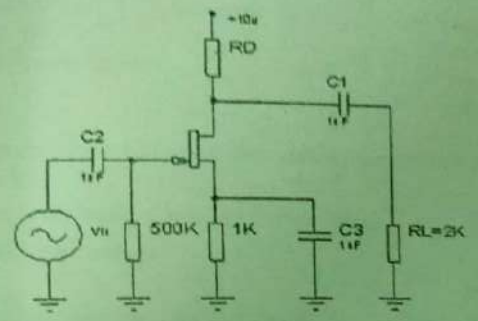

b) Explain the construction and the working operation of EMOSFET along with its V-I characteristics. 7

6. a) Explain center-tap full wave rectifier with input and output waveforms and derive the expression for output dc voltage and rms voltage. 7

b) For the given clipper and clamper circuits, find out the voltage expression. Brief explanation is required. 8

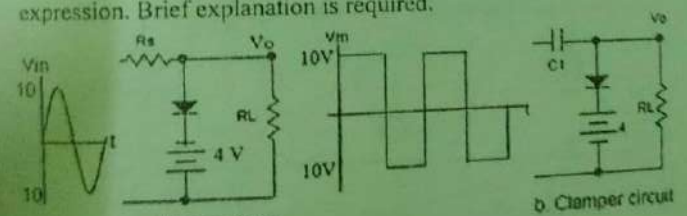

a. Clipper circuit

b. Clamper circuit

2×5

7. Write short notes on (Any Two):

a) Diode capacitance

b) Thermal runway and stability

c) Common drain self-bias n-JFET

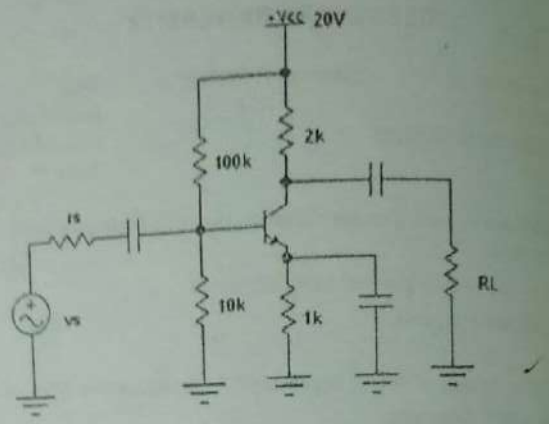

4. a) Find the Input impedance, output impedance and the Overall voltage gain for the transistor shown below.
h_{ie} = 4.7K Ohm, h_{fe} = 150, h_{re} = 2.4×10^{-4}, h_{oe} = 35 micro-siemen.

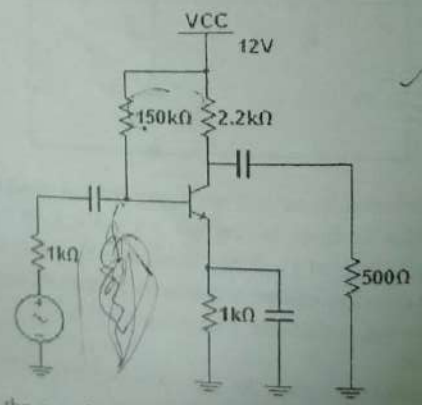

b) Determine the meaning and dimension for all the hybrid parameters. Also, derive the expression for current gain of an amplifier using hybrid equivalent model.

5. a) For the given CS NJFET circuit, calculate the input impedance output impedance and its voltage gain. Given $r_d = 20k$, $g_m = 5mS$, $I_D = 1mA$, $V_{DS} = 4V$. 8

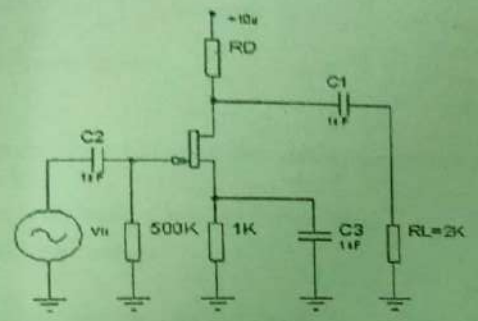

b) Explain the construction and the working operation of EMOSFET along with its V-I characteristics. 7

6. a) Explain center-tap full wave rectifier with input and output waveforms and derive the expression for output dc voltage and rms voltage. 7

b) For the given clipper and clamper circuits, find out the voltage expression. Brief explanation is required. 8

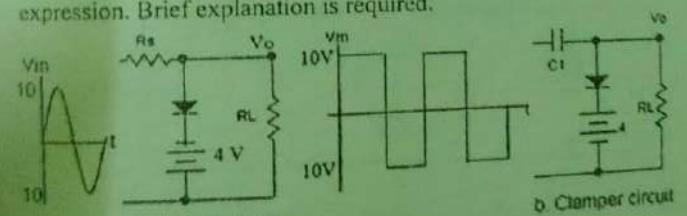

a. Clipper circuit

b. Clamper circuit

2×5

7. Write short notes on (Any Two):

a) Diode capacitance

b) Thermal runway and stability

c) Common drain self-bias n-JFET

b) Expalin the various types of filters used in DC regulated power supply with neat and labeled circuit diagrams. 7

7. Write short notes on: **(Any two)** 2×5

a) Non-linear element
b) Difference between DMOSFET and EMOSFET
c) Bias compensation

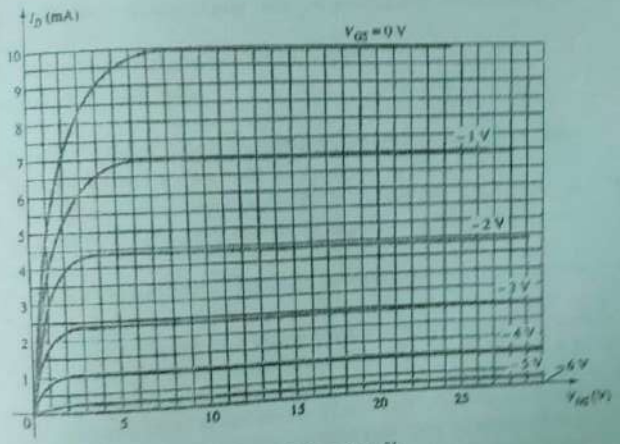

Figure 1 Question 5b

ED-2021 SP.

Im= 1 mA. The range required are (0-5-)mA,(0-100)mA(0-500)mA.

b) Define Instrumentation system and explain static performance parameter of measuring system. 8

5. a) What is strain gauge? Explain its working principle. 8

b) The output of an LVDT is connected to a 5V voltmeter through an amplifier with amplification factor of 250. An output of 4mV appears across the terminals of LVDT when the core moves through a distance of 0.5mm. Calculate the sensitivity of the LVDT and that of the whole setup. The mili-voltmeter scale has 200 divisions. The scale can read 1/5 of a division. Calculate the resolution of the instrument in mm. 7

6. a) Explain the working principle of Strip chart recorder. 8

b) Which one is the fastest ADC? Explain the Flash ADC with suitable example. 7

7. Write short notes on: (**Any two**) 2×5

a) Power dissipation and heat sink

b) R-2R ladder DAC

c) Schering bridge

configuration.

b) Draw dc loadline, ac loadline and find Q-point for given voltage divider bias circuit shown in figure. (Assume β=100)

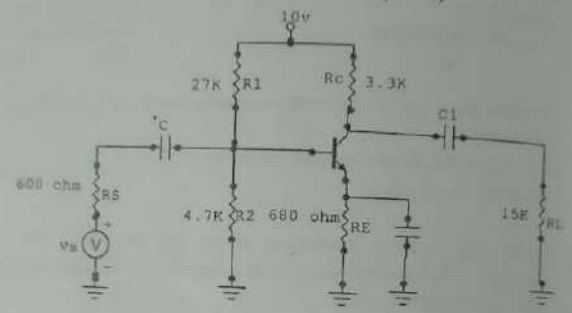

4. a) For the given CE transistor amplifier, write its h-equivalent model and find Z_{in}, Z_{out} and V_L/V_S. Given: h_{fe}=90; h_{ie}=1.8kΩ; h_{oe}=40μA/V

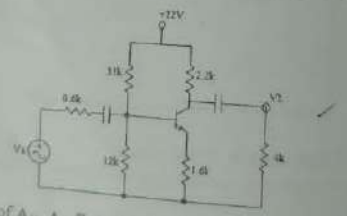

b) Find the values of A_V, A_I, Z_i and Z_o for the following circuit. Typical values of the transistor h-parameters are as follows: h_{ie} = 1.6kΩ, h_{oe} = 20×10^{-6}S, h_{fe} = 80, h_{re} = 2×10^{-4}.

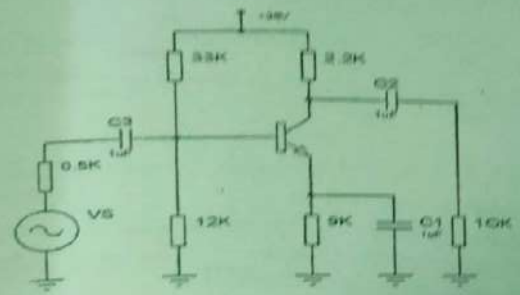

5. a) Draw small signal model of common source NJFET amplifier and derive the expression of its current gain, voltage gain, input impedance and output impedance. 8

b) For the figure determine the quiescent value of V_{GS}, I_D and V_{DS} for I_{DSS}=10mA; R_S=5kΩ; V_P= -5V. 7

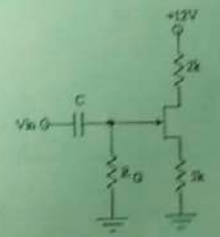

6. a) Explain the operation of center-tap full wave rectifier. Find its efficiency, ripple factor and PIV. 8

b) Considering diode as ideal, sketch V_o for the circuit shown below. 7

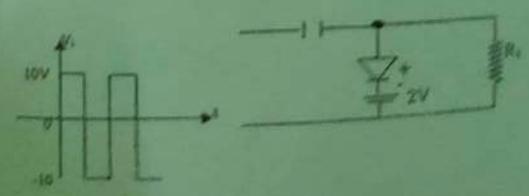

DEPOKHARA UNIVERSITY

Level: Bachelor
Programme: BE
Course: Electronic Devices

Semester: Spring

Year : 2018
Full Marks: 100
Pass Marks: 65
Time : Thrs.

Candidates are required to give their answers in their own words as far as practicable.
The figures in the margin indicate full marks.
Attempt all the questions.

1. a) What is doping and why is it necessary? Also explain the types of doping with necessary diagrams. 8

   b) For a Zenor voltage regulator, determine the voltage across RL and Rs, and current through each branch. Also, determine whether the diode will be safe or not. Given, $R_s = 150$ ohm, $R_L = 1$ KOhm, $V_i = 18V$, $V_z = 12$ V and the maximum zenor current is 80 mA. 7

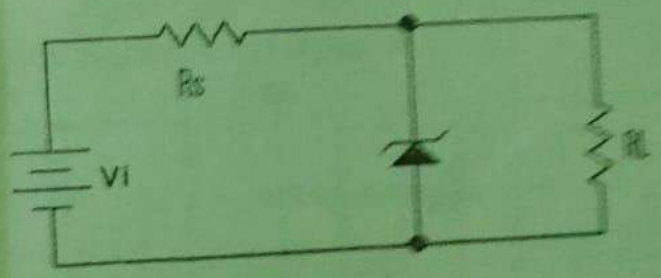

2. a) Differentiate between linear and non-linear devices. Find the piecewise linear model of a Si diode having $\eta = 1.6$ and $I_s = 10^{-10}$ A when it is working in the vicinity of 1 mA at a working temperature of 30 °C. 8

   b) Design a NPN common emitter self-bias (or voltage divider bias) circuit to satisfy following conditions: Operating point is (2mA, 8V), V_{CC} = 16V and $\beta = 100$. 7

3. a) What is early effect? Explain the input and output characteristic curves for a CE configuration. 7

   b) For the BJT circuit shown below, draw dc load line and locate operating point on it.(assume β=100). 8

4. a) What is stability factor? Compare stability of fixed bias, collector to base bias and self-bias circuit configurations.

b) Determine I_C, V_{CE}, I_B, V_E, V_B for the voltage-divider configuration circuit as shown below using the approximate approach if the condition $\beta R_E \geq 10R_2$ is satisfied.

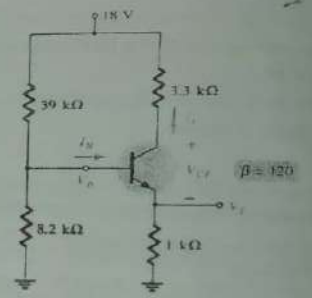

5. a) Explain the operation of n-channel JFET. What is pinch-off voltage? Draw the transfer characteristics curves of n-channel JFET.

b) Given the characteristics curve as shown below *Figure 1*:

i. Sketch the transfer characteristics directly from the drain characteristics.

ii. Using characteristic curve shown in *Figure 1* to establish the values of I_{DSS} and V_P, sketch the transfer characteristics using Shockley's equation.

iii. Compare the characteristics of parts (a) and (b). Are there any major differences?

6. a) For the given clamper circuit, find the clamped output voltage wave form.

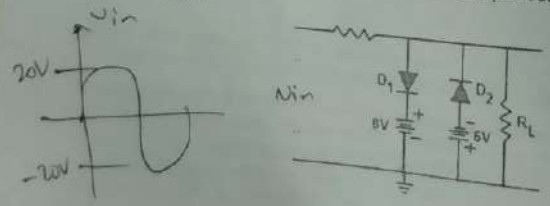

b) Expalin the various
supply with neat and

Write short notes on: (A
a) Non-linear elem
b) Difference betw
c) Bias compensa

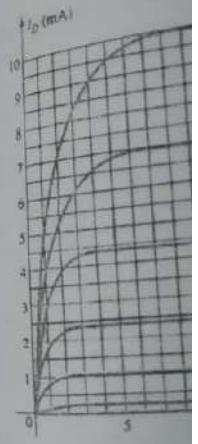

POKHARA UNIVERSITY

Level: Bachelor | Semester: Fall | Year : 2019
Programme: BE | Full Marks: 100
Course: Electronic Circuit and Instrumentation | Pass Marks: 45
Time : 3hrs.

Candidates are required to give their answers in their own words as far as practicable.

The figures in the margin indicate full marks.

Attempt all the questions.

1. a) Explain the effect of coupling capacitance on lower cut off frequency with necessary derivation. 7

   b) For the given circuit find out: 8

      i. $R_{in(stage)}$ of both transistors.

      ii. The voltage gain of each stage

      iii. Overall voltage gain

   Assume $r_e = 20\Omega$, $\beta 1 = \beta 2 = 100$ and two transistors are identical.

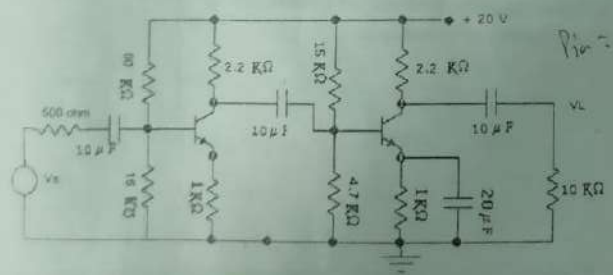

2. a) For a Class B amplifier providing a 20V peak signal to the 16Ω load and a power supply of Vcc=30V.Determine the input power, output power and efficiency 7

   b) What is Barkhausen criteria for oscillation? Explain in detail about Wein-bridge oscillator with necessary derivations. 8

3. a) Derive the non-inverting gain of Operational amplifier. Explain the integrator circuit using Operational Amplifier. 7

   b) What are the main characteristics of an ideal Operational Amplifier? 8

oscillator that will oscillate at 25 KHz. (Assume c=0.1 uF)

b) What is ideal operational amplifier? Design an Operational amplifier circuit to produce output $V_O = 2V_1+4V_2-3V_3$ 2+5

4. a) Define the terms 2×4
   i. Virtual Ground
   ii. Output offset voltage
   iii. CMRR
   iv. Slew Rate

   b) How can you measure the value of unknown inductance by using Maxwell's bridge circuit? Explain with limitation. 7

5. a) Explain the working principle of Linear Variable Differential Transformer with a neat diagram. 7

   b) A resistance strain gauge with gauge factor of 2 is fastened to steel member subjected to a stress of $1050 kg/cm^2$. The modulus of elasticity of the steel is $2 \times 10^6 kg/cm^2$. Analytically compute 8
   i. Percentage change in Resistance.
   ii. Poisson's ratio.
   iii. The value of strain.
   iv. The value of ΔR =? If R = 300Ω.

6. a) Which is the fastest type of ADC? Explain its working principle with necessary expressions. 7

   b) Design a binary weighted resistor DAC with digital input 101011. Also determine analog output voltage for given input. Assume V_{ref} = + 8 V. 8

7. Write short notes on: (Any two) 2×5
   a) Magnetic tape recorder
   b) Performance parameter
   c) Bio-Physical Veriables

Level: Bachelor
Programme: BE
Course: Electronic

Candidates are re
as practicable.
The figures in the
Attempt all the qu

1. a) Explain the effe
with necessary d
b) For the given cir
i. $R_{in(stage)}$
ii. The volt
iii. Overall
Assume r_π = 20Ω

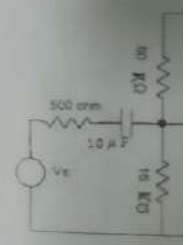

2. a) For a Class B a
and a power sup
power and efficie
b) What is Barkhau
Wein-bridge osci
3. a) Derive the non-i
integrator circuit
b) What are the ma

POKHARA UNIVERSITY

Level: Bachelor
Programme: BE
Course: EC and Instrumentation

Semester: Spring

Year : 2018
Full Marks: 100
Pass Marks: 45
Time : 3hrs.

Candidates are required to give their answers in their own words as far as practicable.

The figures in the margin indicate full marks.

Attempt all the questions.

1. a) How does shunt capacitance affect the high frequency performance of an amplifier? Derive an expression for Shunt capacitance and high frequency response 7

   b) Find the overall voltage gain of cascaded transistor amplifier as shown in figure below. Given $r_{e1}=r_{e2}=25\Omega$ and $\beta 1=\beta 2=110$. 8

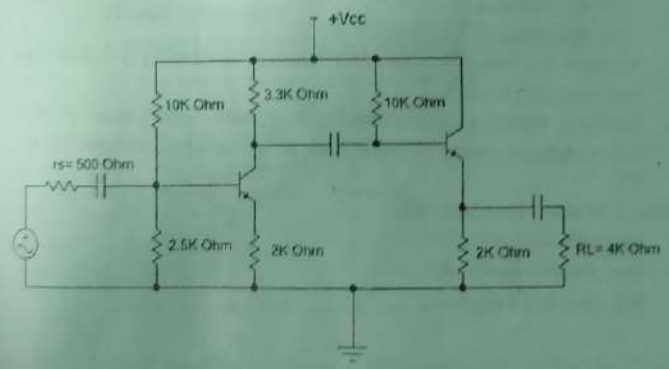

2. a) Why power amplifiers are called large signal amplifiers? Briefly explain the class AB operation. 5

   b) Explain cross-over distortion and the techniques to minimize its effect. 5

   c) "Negative feedback improves the band with" Justify mathematically. 5

3. a) What is Barkhausen criteria for oscillation? Design a wein-bridge 2+6

POKHARA UNIVERSITY

Level: Bachelor
Programme: BE
Course: Electronic Device

Semester: Fall

Year : 2019
Full Marks: 100
Pass Marks: 45
Time : 3hrs.

Candidates are required to give their answers in their own words as far as practicable.
The figures in the margin indicate full marks.
Attempt all the questions.

1. a) Explain the working mechanism of PN junction diode. How is depletion region created across it? Also explain the VI characteristics curve of PN junction diode. 7

b) Determine V_L, I_L and Iz for the given zener regulator circuit. 8

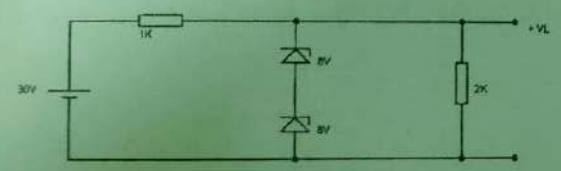

2. a) For the circuit shown below find: I_B, I_C, I_E, V_B, V_C, V_E. Is the transistor operating in the active mode? Given: β=100. 7

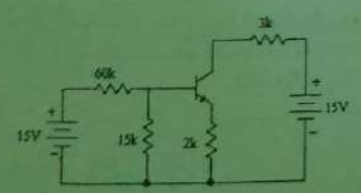

b) What is Stability factor? Compare stability of fixed bias, collector to base bias and self-bias circuit configurations. 8

3. a) What are the various leakage currents in a transistor? Explain the input and output characteristics of a BJT transistor in CE 7

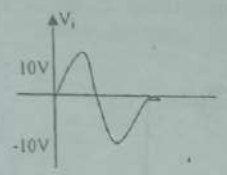

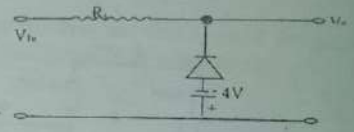

7. Write short notes on: (Any two)
   a) Transition capacitance
   b) Piecewise linear model of a diode
   c) Enhancement-type N-channel MOSFET

Level: Bachelor
Programme:BE
Course: Electronic De

Candidates are requi
as practicable.
The figures in the mar
Attempt all the questi

1. a) Define transition a
   capacitance on reve
   diode is used as swi

   b) If Vz=8v, series resi
   =100Ω, R_L = 990Ω.
   Find V_R, V_o, I_L, I_Z if
   i. V_{in} = 12v
   ii. V_{in} = 8.5v
   also determine the
   delivered to load resi
   when zener diode is wo

2. a) What is reach throug
   BJT with necessary d
   b) Derive the expression
   Also, explain about E

3. b) Draw dc loadline, ac
   divider bias circuit sho